serimax
Field Joint Coating

Changing Our Mindset
Orbiter™

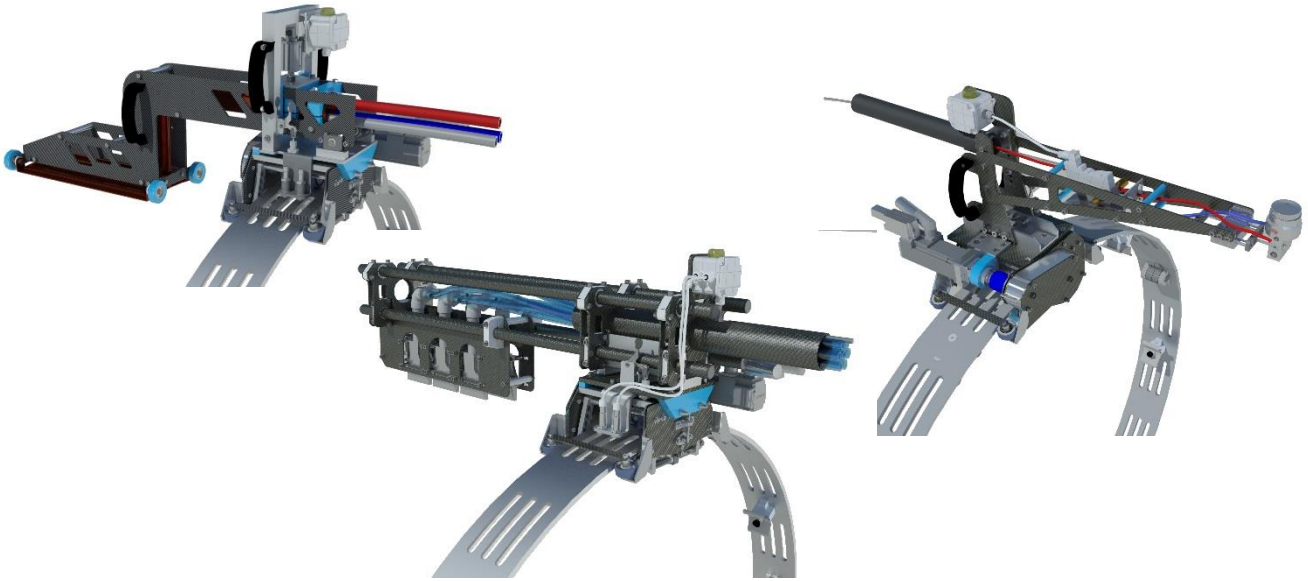

vallourec

Changing our Mindset
Field Joint Coating

serimax
Field Joint Coating

- **Managing the Contradiction**
  - Driving down cost
  - Raising safety
  - Enhancing Quality
- **Applying LEAN to FJC**
  - Tackling waste
  - Using data
  - Embrace pFMEA

vallourec

Changing our Mindset
The Journey

- **The Serimax FJC journey**
  - In late 2014 Serimax constructed their first Orbiter™ two component spray robot.
  - It was not without the anticipated early teething problems
  - In early 2015 combining operator experience, material data, and process analysis
  - A cross discipline team was formed, to evaluate using pFMEA practices the significant risk factors which require control

Changing our Mindset
The Objective - Quality

- **pFMEA**
- **Consistent DFT**
  - Consistent speed of movement of the spray gun independent of pipe diameter and factory coating
  - Consistent fan width to cover the joint and overlap
- **Great adhesion**
  - Clean grit – free from contamination and water
  - Clean compressed air – oil and water free
  - The correct grade and specification
  - Pipe temperature
  - Mix ration of the coating system

Changing our Mindset
The Objective - Waste

- **pFMEA**

- **Right first time**
  - Low repair rate
- **Manning**
  - Reduce the number of operators
  - Avoid in efficient and wasted movement
  - Increase productive time
- **Chemical waste**
  - Apply the coating system to specification and no more
  - Avoid excessive solvent use

Changing our Mindset
The Objective – Waste

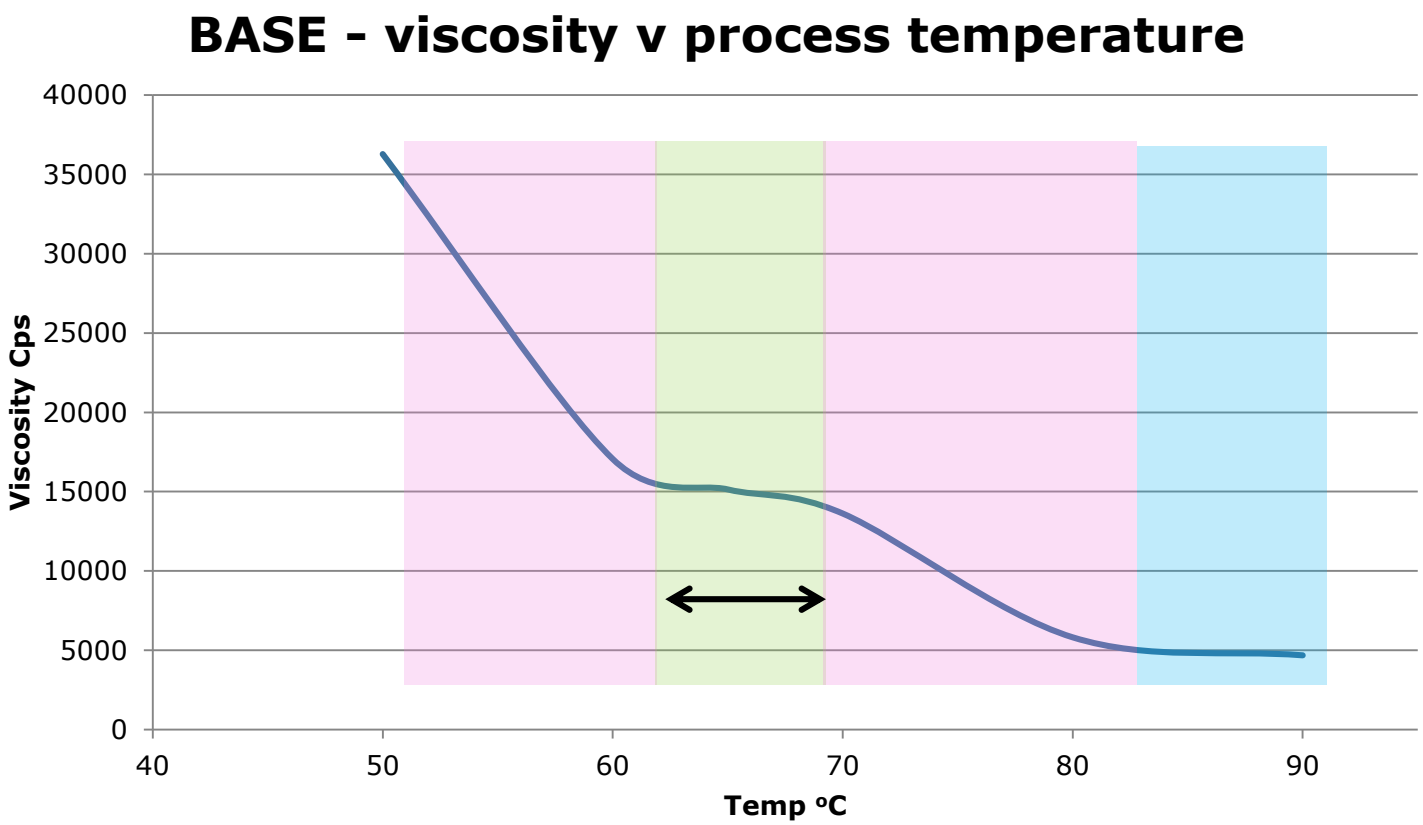

Changing our Mindset
The Objective - Safety

- **pFMEA**
- **Mechanical lifting**
  - Heavy equipment over bell-holes
  - Contact with power lines
  - Ground stability
- **Manual lifting**
  - Weight restricted to <25kg
  - Operator fatigue concerns
- **Exposure to chemicals**
  - Solvent use and disposal
  - Environmental contamination
  - Operator exposure

Changing our Mindset
Design parameters - Specification

Orbiter™ Robot – Original design brief (pFMEA driven)

- Machine Weight 15kg
- Equivalent linear speed 700 mm/s relative to pipe circumference
- Coating types - 2 component systems with a wide ratio range (SP2888 was used as during development)
- Diameter limitations - From 12” to over 60 inch
- Joint widths - From 200mm to more than 600mm
- A minimum of one operator
- Predictable maintenance
- Quick attach and detach to band times <5 seconds
- Non productive time < 20 seconds
- Solvent use < 2 litre per 15 joints coated (mainline operation)
- Application thickness (DFT) +/- 10% over the entire coated surface
- Application rate greater than 20 joints per hour

Changing our Mindset
Design parameters - Performance

Changing our Mindset
Design performance – Achieved data

serimax
Field Joint Coating

— **Orbiter™ MCL Robot – In service performance**
(Based on 48” pipe SCPX project)

- Maximum 170 joints per day (3 operators / see comment)
- More than 20,000 joints coated
- Full strip and rework less than 0.2%
- Remedial corrections (holiday) < 5%
- Zero ratio failures
- Zero lost time incidents due to equipment or manual handling

— Comment / lessons learned

- **Induction heating impacted the cycle time due to mechanical handling constraints adding 90 seconds + personnel**
- The Orbiter™ robot drive system required more maintenance than predicted – drive pinions changed every 500 joints, at a total cost of €3,000 (parts only) + labour

Changing our Mindset
Design performance – Continuous Improvement (CI)

serimax
Field Joint Coating

- **Room for Improvement (CI)**

- Despite the performance on the SCPX project being exceptional, certain changes are identified
  - In service maintenance can be reduced
  - Cost of equipment reduced
  - The weight of the robot reduced to under 10kg
  - Control of speed improved to less than +/-0.5% variation, which impacts DFT uniformity
  - Speed range adjustable and programmable between zero and 1250 mm/s
- Additions to the Orbiter™ family
  - Orbiter™-FBE
  - Orbiter™-Heat – needed for high demand operations where more than 160 JPD are required

Changing our Mindset
Design performance – Continuous Improvement (CI)

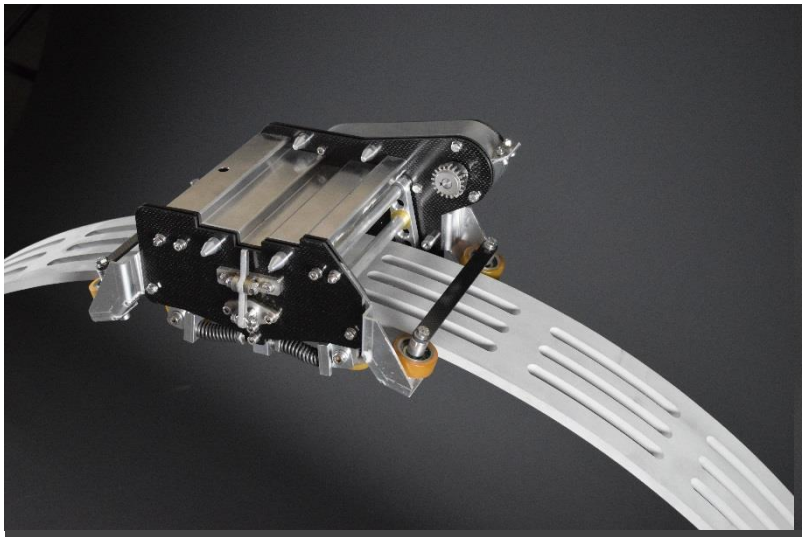

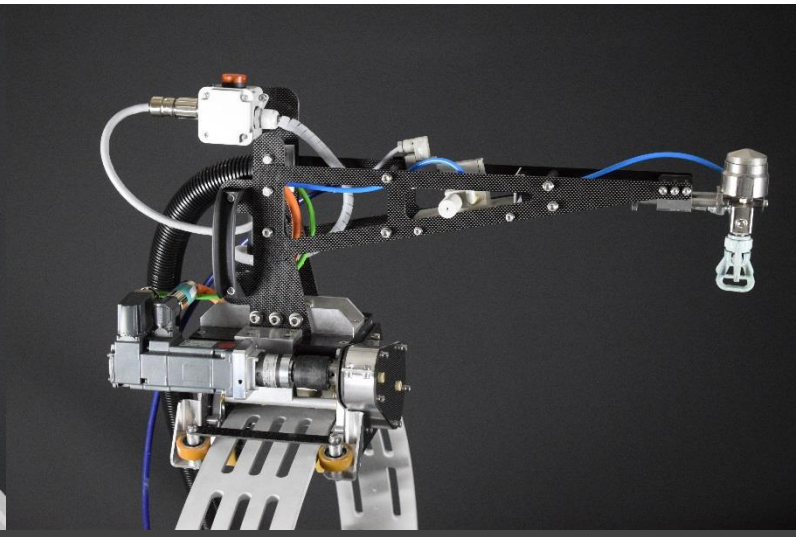

Next generation

- Reduced weight using carbon fibre composites and 3D printing
- Robust drive system
- Precise speed control
- Improved load carrying for induction heat application
- Addition of FBE and Induction heat to the Orbiter™ family

Changing our Mindset
Orbiter™ - Integrated Coating Solutions

serimax
Field Joint Coating

- **A band for all coating systems**
  - One design concept for pipes 12” to 60” plus
  - Low cost and maintenance
  - Few change parts
  - Orbiter™ - A product family

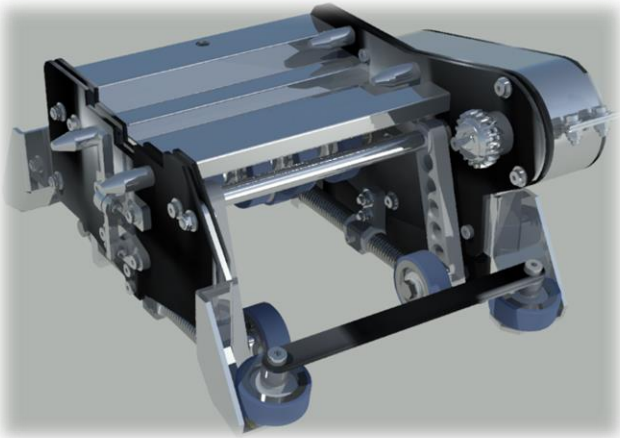

- **Drive synergies**
  - A common control panel for Induction heating, MCL, and powder applications
  - Control strategy based on tried and tested field verified production

Integrated Coating Solutions
Orbiter™ - Band

Aluminium Band

Light weight

Robust Latch

Quick action

Stiff light carriage

Constant traction

Integrated Coating Solutions
Orbiter™ - One band for all operations

Multi Component Liquid

Quick engagement

Inverter Scan-Heat

To the same band

Fusion Bonded Epoxy

Rapidly detached

Changing our Mindset
Orbiter™ - Integrated Coating Solution

serimax
Field Joint Coating

- **Serimax Orbiter™ - 2nd Generation**
  - Tested over more than 5,000 x 48” joints
  - Single person operation achieved
  - High throughput rates – 12” and upwards
  - Low repair rates and efficient material usage
  - Demonstrations available

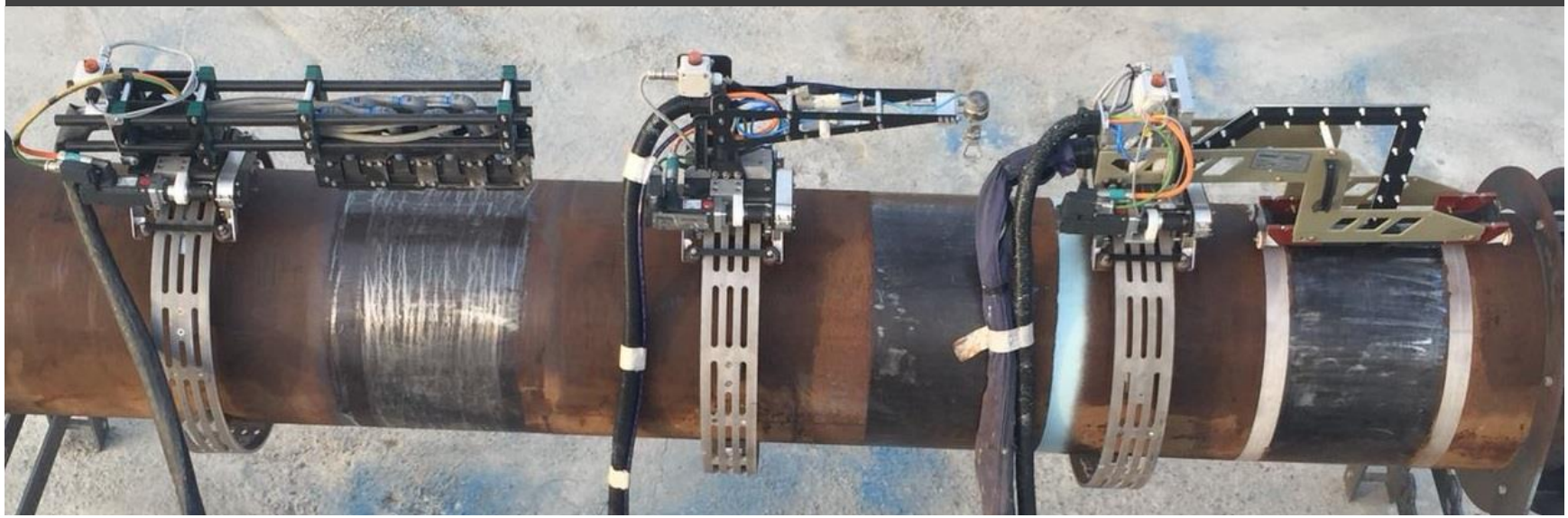

Questions

Questions

Andrew STRIBLEY, Engineering Manager
T +44 (0)1254 264320
M +44 (0)7891 821799

Serimax FJC - Vallourec Group
Unit 5 Greenbank Business Park Dyneley Road
Blackburn
BB1 3AB
England